GUJARAT GAS

GUJARAT GAS

TECHNICAL SPECIFICATION
RPD Meter, EVC, MODEM and FRP Box with PSU and Stabilizer

Document No. : GGL/TS/RPD_EVC_MODEM_PSU_FRP_STABILIZER/2018

GUJARAT GAS

TABLE OF CONTENT

1. INTRODUCTION AND SCOPE 4
2. DEFINITIONS 4
3. INVENTORY 4
4. QUALITY ASSURANCE (QA) 4
5. INSPECTION / DOCUMENTS 4
6. DOCUMENTS OF PRECEDENCE 5
7. DATA SHEET FOR RPD METER 5
8. DATA SHEET FOR EVC 9
9. DATA SHEET FOR MODEM 14
10. DATA SHEET FOR FRP PANEL 15
11. DATE SHEET FOR POWER SUPPLY AND VOLTAGE STABILIZER 18

Approved

1. INTRODUCTION AND SCOPE

Gujarat Gas Ltd., is a Group Company of Gujarat State Petroleum Corporation Ltd., (State Government undertaking) is supplying natural gas to automobile, industrial, commercial and domestic consumers including CNG stations in various cities of Gujarat.

This document covers the technical specification for the procurement of RPD Meter, EVC with modem and other accessories used for accurate measurement of natural gas for distribution systems. It describes the general requirements, controls, tests, QA/QC examination and final acceptance criteria which needs to be fulfilled.

2. DEFINITIONS

OWNER / CLIENT	Gujarat Gas Ltd., (GGL)
EVC	Electronic Volume Corrector
GSM	Global system for Mobile Communications
PNG	Natural Gas produced from Gas wells, Gas condensate wells or Oil wells and the residue Gas remaining after conditioning being metered, regulated / controlled, odorized & distributed through pipelines for various applications, i.e. for industrial, commercial and domestic.
VENDOR	Vendor The person(s), firm, company, organization from whom Client/Contractor procures materials.
TPIA	Third Party Inspection Agency
EIC	Engineer In Charge

3. INVENTORY

For ensuring continuity in metering with immediate replacement in minimum inventory of 10 Nos. of EVC or 5% of total commissioned EVC, whichever is higher should be available with Vendor all the time for immediate replacement. Bidder should submit the monthly report on the inventory to GGL giving the status on inventory. GGL reserves the right to check the inventory at any point of time.

4. QUALITY ASSURANCE (QA)

The Contractor/Manufacture /Vendor shall submit QAP after getting firm order from Owner for their review and approval. Prior to dispatching of materials, vendor shall offer material lot to TPIA/Owner for final acceptance test as per approved QAP at their premise following for review of TPIA / EIC at the time of final inspection at vendor premise prior to dispatch of materials.

5. INSPECTION / DOCUMENTS

Inspection shall be carried out as per Owner Technical Specification / approved QAP.

TPIA /EIC shall carry out final inspection at vendor premise before dispatching of materials. Contractor / Manufacture /Vendor shall furnish all the material test certificates, proof of approval / license from specified authority as per specified standard, if relevant, internal test / inspection reports as per Owner Tech. Spec. & specified code for 100% material, at the time of final inspection of each supply lot of material.

Contractor / Manufacture /Vendor shall furnish all the codes / documents shall be made available for reference of TPIA /EIC at the time of inspection.

For any control, test or examination required under the supervision of TPIA/EIC against approved QAP, vendor shall intimate through letter/mail to TPIA/EIC one (1) week in advance about inspection date and place along with production schedule.

Approved

Even after third party inspection, EIC/Owner reserves the right to select a sample of items / materials randomly from each manufacturing batch / lot & have these independently tested. Should the results of these tests fall outside the limits specified in Owner technical specification, then Owner reserves the right to reject all production supplied from the batch.

Hiring of NABCB approved TPI is in scope of bidder

6. DOCUMENTS OF PRECEDENCE

In case of conflict between the requirements of this specification and that of the referred codes, standards and specifications, the requirements of the referred codes, standards and specifications shall govern.

7. DATA SHEET FOR RPD METER

<table>
<tr><th>Sr. No.</th><th>Description</th><th>Specifications</th></tr>
<tr><td>1</td><td>Material</td><td>The material used for the manufacturing of RPD meters should be aluminum or any other compatible material which can cater the load of designed pressure and protect the corrosion.
*Note: Ductile Iron is not acceptable as material of construction for meter.</td></tr>
<tr><td>2</td><td>Spare Parts</td><td>Vendor shall provide the Price list of all spares along with the Bid which may be required for the maintenance and repair of the meter.</td></tr>
<tr><td>3</td><td>Design Pressure</td><td>Meter shall be manufactured in line with the below given pressure requirements:
1. 1.5 times of MAOP for ANSI 150#
2. Max 49 Bar (g) - 300# (ANSI 300)
3. Max 99 Bar (g) - 600# (ANSI 600)</td></tr>
<tr><td>4</td><td>Maximum Allowable Operating pressure range</td><td>1. 6 bar (g) for 150#
2. 40 bar (g) for 300#
3. 75 bar (g) for 600#</td></tr>
<tr><td>5</td><td>Pressure Test</td><td>Pressure test shall be carried out as per the design pressure of meter in line with the relevant standard and vendor shall submit the pressure test certificate for the same. Owner representative/Third party inspection Agency shall witness finish goods testing as per the approved QAP.</td></tr>
<tr><td>6</td><td>Accuracy of Meter</td><td>Meter shall be designed with accuracy class # 1, in line with EN12480 as detailed in table below:
<table>
<tr><th>Q(m3/h)</th><th>Permissible error</th></tr>
<tr><td>Qmin <= Q < Qt (+/-)</td><td>2%</td></tr>
<tr><td>Qt <= Q < Qmax (+/-)</td><td>1%</td></tr>
</table></td></tr>
<tr><td>7</td><td>Rangeability</td><td>Meter shall have minimum rangeability as described in table Below:

<u>For 150# rating:</u>

<table>
<tr><th>G-Size</th><th>Rangeability</th></tr>
<tr><td>G16</td><td>1:65 (Optional)</td></tr>
<tr><td>G16</td><td>1:100</td></tr>
<tr><td>G25</td><td>1:65 (Optional)</td></tr>
<tr><td>G25</td><td>1:100</td></tr>
<tr><td>G40</td><td>1:100</td></tr>
<tr><td>G65</td><td>1:100</td></tr>
<tr><td>G100</td><td>1:100</td></tr>
<tr><td>G160</td><td>1:100</td></tr>
</table></td></tr>
</table>

Approved

		<table><tr><td>G250</td><td>1:160</td></tr><tr><td>G400</td><td>1:160</td></tr><tr><td>G650</td><td>1:160</td></tr></table> **<u>For 300# rating:</u>** <table><tr><th>G-Size</th><th>Rangeability</th></tr><tr><td>G40</td><td>1:100</td></tr><tr><td>G65</td><td>1:100</td></tr><tr><td>G100</td><td>1:100</td></tr><tr><td>G160</td><td>1:100</td></tr><tr><td>G250</td><td>1:160</td></tr><tr><td>G400</td><td>1:160</td></tr><tr><td>G650</td><td>1:160</td></tr></table>
8	Flange to flange connection	In general flange to flange distance for individual G-size meter shall be as per table below: <table><tr><th>G-Size of PD Meter</th><th>DN Size</th><th>Flange to flange size for 150#</th><th>Flange to flange size for 300#</th><th>Flange to flange size for 600#</th></tr><tr><td>G16</td><td>50</td><td rowspan="5">171 mm</td><td rowspan="4">240/273 mm</td><td rowspan="9">Vendor to furnish</td></tr><tr><td>G25</td><td>50</td></tr><tr><td>G40</td><td>50</td></tr><tr><td>G65</td><td>50</td></tr><tr><td>G100</td><td>80</td><td rowspan="8">240/273/375 mm</td></tr><tr><td>G160</td><td>80</td><td rowspan="4">241 mm</td></tr><tr><td>G250</td><td>100</td></tr><tr><td>G400</td><td>100</td></tr><tr><td>G650</td><td>150</td><td>260/406/450* mm</td></tr></table> *In case of any other flange to flange sizes, vendor shall take prior approval of GGL at tendering stage.
9	Facing and Finish	150# / 300 # 600# /FF Finish/ANSI
10	Marking	Each meter shall have name plate placed with below details. Vendor shall ensure that marking is as per EEC/MID/EN 12480. Name plate should be not affected by external factors like corrosion. • Make • Model • Serial No. • Number EN12480 • Pressure Range • Maximum working pressure Pmax (bar) • Temperature Range • Flow range • Qmin, Qmax, Qt • Manufacturing year • Flow direction • Class • Size • Impulse rate or K factor • Compliance to standard • Cyclic volume

Approved

11	Gas Type	Natural Gas
12	Applicable Standard	EN 12480 (latest edition) The meters shall be approved by India Metrological Department.
13	Area Specification	IEC, Zone 1, Gr. IIA, IIB, T3 Vendor to provide the certification for the same
14	Pressure drop across meter	Vendor to furnish calculation for pressure drop. The pressure drop calculation shall be approved by GGL.
15	Differential pressure at Max flow	Vendor to furnish
16	Temperature Range	-20 to 55 deg C (as per EN 12480)
17	Flow Range	Vendor to furnish
18	Typical start Flow	Vendor to furnish
19	Indication Accuracy	Accuracy Class #1
20	Linearity	As per EN12480 standard
21	Repeatability	As per EN12480 standard
22	Cyclic Volume	RPD meter shall have cyclic volume such way that the gas velocity in meter shall be lesser than 30 m/sec
23	Over range protection	Meter shall have over range protection of at least 120% maximum flow. Suitable flow restrictor should be mandatorily provided along with the meter to limit the gas velocity flowing through the meter and preventing the meter damage in case of excessive flow. Design of flow restrictor shall be submitted to GGL for approval before supply.
24	Calibration certificate	Vendor shall ensure the meter is calibrated with air at atmospheric condition and meets the range ability, Linearity and Repeatability requirements Meter shall be calibrated at flow rates as defined below: Qmin, 0.25Qmax, 0.5 Qmax, 0.75 Qmax, Qmax (5 Point Calibration)
25	Calibration Requirements	Vendor shall provide the details for calibration requirements of the meter: 1. Recommended periodicity for the calibration 2. Volume based frequency
26	Manufacturer and Model No. of Meter and Pulsar	Vendor to furnish
27	Pulsar	Vendor to furnish details for both LF pulsar (LF1, LF2 and AT). Anti-tampering feature is required in the meter which will trigger an alarm in EVC in case LF pulse cable is cut or removed from the meter. Vendor shall ensure that RPD meter is compatible with any make EVC via LF pulsar. Necessary cables soldered with connector (cable length Minimum 2.5 m) to be provided with meter to connect EVC with meter. Meter should compatible to give correct pulses (no excess / short pulses) to be conveyed to EVC. Provision for wire sealing should be available on pulse connector. Pulse values shall normally be expressed in the form of “1 IMP=__ m3” (*as per EN12480)
28	Enclosure	IP 66 or better
29	Installation Position	Meter should be compatible for Horizontal (Left to right and Right to Left) and Vertical (Gas line from top to bottom or bottom to top) installation condition.
30	Corrosion Control	All parts of the meter shall be able to resist any corrosive substances contained in the external atmosphere with which they may be in contact

Approved

		during normal conditions of use. Where necessary, meters shall be provided with a suitable coating to protect against corrosion. Any such protective coating shall meet test requirements specified in EN12480. Meter shall be field proven in respect to design, material and application.
31	Impeller and Impeller shaft	High grade Alloy steel, Synthetic Elastomer or Extruded Aluminum alloy. The meter body and the internal mechanism shall be manufactured of materials suitable to the service conditions and resistant to attack from the fluids which may pass through the meter. Non-Corrosive, tested very low noise, frictionless, endurance for minimum 20 years' life & external tamper proof. Plastic components not to be used in Meter. Vendor to specify the material used for construction
32	O-Rings/ Gaskets	Synthetic Elastomer
33	Magnetic coupling	Hard Ferrite Ceramic Magnet. Magnetic coupling as per OEM's manufacturing standard is also acceptable however, external magnet shall not be able to affect the performance of meter.
34	Timing and reduction Gears	Steel Alloy/Steel (Or Stainless steel)
35	Bearing	SS 316/ High Carbon Steel
36	Other wetted Parts	SS 316
37	Bolts	To be provided by bidder (Galvanized compulsorily) Fixed length bolts to be supplied with Mechanical Meter. 2 Bolts with 1 mm drilled Hole on Bolt head is required so as to seal meter at inlet and outlet near flanges. The Bolts shall be hot dipped zinc coated in accordance to the requirement of class C of ASTM A 153.
38	Power Supply	Meter shall not require any sort of power supply for its operation.
39	Output	2 LF (LF1 and LF2 for Pulse Coherence check), 1 Anti Tampering output.
40	Enclosure	NEMA 4 & 7 or any equivalent standard.
41	Sealing	Meter shall have proper manufacturing / calibration seal on index head and meter body. The meter body shall have suitable provision for wire sealing with an objective to ensure meter internals are not accessible without tampering / breaking of wire seal. Mechanical counter to be made intact with meter body through wire seal
42	Security	Meter index head shall have facility to provide the output to EVC/Modem in case of the unauthorized removal of pulse cable.
43	Totalizer index	Meter Index shall be oriented as per EN12480 or relevant standard with IP66 or better rating. The meter index should be flexible for orientation for the purpose of ease in meter reading.
44	Local Mechanical Counter	Local mechanical counter should indicate the volume of the measured gas in cubic meters at metering conditions without any formula or correction. It shall have minimum 8 digits & unit of measure should be m3 and marked on index plate. The meter index should be weather proof to IP 66 and UV protection certificate should be available.
45	Index of meter	Oriented as per EN12480 or relevant standard with IP 66 or better rating. The meter index should be flexible for orientation for the purpose of ease in meter reading.
46	Cover of index	UV resistant (number plate should be fixed inside the counter).
47	Pressure Tap	¼" NPT. Inbuilt in meter (*As per EN 12480) with pressure marking.
48	Temperature Tap	Inbuilt in meter (*As per EN 12480) with temperature marking Tapping dimensions shall be according to ISO 228-1, G1/2. *Vendor shall provide the thermo well with meter.

Approved

49	Lubricator with Accessories	500 ml of suitable oil with each meter and all necessary accessories Bidder shall provide the specification of oil. Oil indicator should be available on meter body for all mounting possibilities specified above in the specs.
50	Meter coating	Coating & painting of the body (*as per EN 12480)
51	Flow restrictor	Vendor to provide flow restrictor, If required (as per size of meter with OD and Bore Diameter)and vendor to furnish the details / drawings of flow restrictor to GGL for approval before supply.
52	Adherence Certificate	Meter shall have valid type approval certificate or MID certificate complying to EN 12480 issued by DVGW, NMI, PTB, LNE, SGS UK, INIG Poland and/or FCRI. Meter shall have valid certificate of approval issued by department of legal metrology (Government of India).
53	Other Documents	Manufacturer's calibration certificate, warranty certificate, Operation & maintenance Manual, Product Brochure (with each meter), **Legal Metrology certificate.**
54	Protection against RF/FM Interference	The meter shall have proper protection RF/FM interference.
55	Warranty	All parts shall be warranted for 18 months from delivery date or 12 months from commissioning date whichever is earlier.
56	Others	Meter testing should comply to Annexure A, B and C of EN12480. Necessary reports (For Annexure A) shall be submitted along with the bid. Manufacturer shall furnish Cv values, Torque data, weight and selected meter model along with GA drawing and QAP for approval of GGL before commencing supplies.
57	Packaging	Appropriate material and method shall be used for packing to protect the material from damage during transportation. All necessary markings like normal position, handle with care etc. shall be mentioned on package. Wooden box packing is advisable.

8. DATA SHEET FOR EVC

Sr. No.	Description	Specifications
1	Type	Microprocessor based – Non Rechargeable battery operated Volume corrector approved as per EN 12405 with Pressure Transducer and Temperature sensor suitable for mounting on the meter in the field location. The EVC shall have suitable provision for Wire Sealing with an objective to ensure EVC internals are not accessible without tampering / breaking of wire seal. In case EVC and MODEM is integrated then the circuit required to power the MODEM shall not impact the performance of EVC. Bidder to clearly specify earthing requirement along with necessary drawings for trouble free operation of EVC and modem.
2	Make	Vendor to Furnish
3	Model No.	Vendor to Furnish
4	Material	Non-corrosive material
5	Function	To measure actual gas volume, pressure, temperature, and calculate compressibility factor and correction factor of the gas. Based on that EVC shall calculate standard volume of gas. The unit shall be complete in all respects to achieve the functionality mentioned here in.
6	Inputs	Pulse output from RPD meter for flow. 2 LF and 1 Anti Tampering input from RPD meter to be collected. Coherence and Anti tampering function shall be there in EVC. No excess/short pulses to be measured by EVC from any make of meter. Vendor shall ensure that EVC is compatible with any make of RPD or Turbine Meter with input mode as LF pulses.

Approved

		Temperature signal from RTD (PT1000/PT500/PT100) thermal element with an accuracy of +/- 0.15% of measured value. All interconnecting cable shall be screened. The RTD with Cable (Minimum 2.5 m) and cabling accessories to be supplied by the vendor. Provision for wire sealing should be available on temperature sensor. Length of RTD should be such that it should not touch meter body. There shall be a provision to configure backup / fix value in case of temperature malfunction.	
		Pressure signal from built-in pressure sensor with an accuracy of +/-0.1% of measured range of 0-10 bar (g) for 150#, 3-30 bar (g) for 300#, 3-49 bar (g) for 600#. Pressure sensor to be individually calibrated and its characteristics shall be stored within the volume corrector. The pressure sensor should be preferably external type and replaceable at site. Cable Length: Minimum 2.5 m. Pressure sensor supplied shall be suitable for mounting at the meter side which has ¼" NPT port (No need of isolation valve in between). If end connection size of a pressure sensor is different, then suitable adaptor shall be supplied by the bidder with the pressure sensor. EVC shall have provision to upgrade pressure sensor to higher range (3-30 bar (g) for 300#, 3-49 bar (g) for 600#). Vendor shall be able to provide the optional pressure sensor with operating pressure up to 49 bar(g) and with accuracy level & can be made available as spare for the EVC. Provision for wire sealing should be available on pressure sensor. There shall be a provision to configure backup / fix value in case of pressure malfunction.	
7	Parameters to be monitored / calculated	Line Temperature	
		Line Pressure	
		Uncorrected flow rate	
		Corrected flow rate	
		Cumulative Uncorrected volume	
		Cumulative Corrected volume	
		Compressibility and Correction factor	
		Un-corrected volume of today	
		Corrected volume of today	
		Total corrected volume till yesterday	
		Total Uncorrected Volume instantaneous	
		Warning / Alarms	All below alarms shall be stored in archive data with date & time stamp: The alarms should be visible on the display panel.
			Battery Low
			Pressure beyond set threshold limits (High and low).
			Temperature beyond set threshold limits (High and low)
			Uncorrected flow beyond set threshold limits (High and low)
			Correction factor beyond set threshold limits (High and low)
			Threshold limits as specified above shall be User configurable.
			Fault in measurement
			EVC Malfunction
			Tampering (Removal of pulse cable from the meter)
		Connectivity	RS232 and/or RS485 serial/parallel port / optical port for PC/Laptop
		Conduit / gland connection: To be specified by the vendor	
8		GSM is mandatorily required in the modem. Bidder may however additionally provide GPRS and / or 4G-LTE communication. Vendor shall provide all necessary cables for interconnecting EVCs, Modems, power supply and stabilizer shall be supplied by the Bidder.	

Approved

	Online Communication	Vendor shall ensure that EVC is AMR (Automatic Meter Reading) competent via Modbus Mandatorily (Vendor may offer any additional industry leading Open protocols). Any other protocol may be provided as additional.
		All essential Modbus list including for the hourly data shall be provided by bidder.
		EVC shall be able to communicate Locally and Remotely. (Separate ports and cable should be there for Local and remote communication.
		Vendor shall provide the MODBUS list for the individual parameters. Any change in the list, shall be time to time reviewed & provided. Preferably the Modbus list shall be editable.
		Modbus RTU Communication as alternate using RTU/Data Concentrator in case GSM based communication becomes obsolete by Telecom firms.
9	Isolation	All inputs, outputs and power supply shall be individually isolated. Also isolator for spike removal shall be included. Necessary isolation shall be provide to avoid interference of pulse transmission.
10	Display	Display shall be scrollable, single large graphical LCD type with keypad buttons at front. Displaying all units, messages, alarm, etc. in English like a) Date and time, b) Pressure in Bar, c) Temperature in Deg C, d) Compressibility factor e) Conversion factor f) Corrected flow rate in Sm3/hr g) Uncorrected flow rate in m3/hr h) Uncorrected cumulative counter in m3, i) Corrected cumulative counter in Sm3, j) Yesterday's consumption, k) Today's consumption, l) monthly consumption m) Battery voltage n) Pressure out of range o) Temperature out of range p) Flow over range q) Notification tab for warnings, alarms, errors etc. r) Alarms s) Date wise consumption minimum for last 30 days, Display should not flicker at any time.
11	Units of Display	As per EN12405
12	Power supply	Lithium type Battery (3.6 V DC) along with mounting hardware and minimum 5 years' life (vendor to specify the conditions under which life will be calculated). Battery pack should be intrinsically safe and replaceable in Field itself, without any loss of EVC configuration data.
		Voltage/Current Rating : (to be specified by vendor)
		Socket type connection for battery shall be provided to avoid data loss during the replacement. EVC shall have provision for the external power supply source. Configuration and log data should not be lost/auto changed at the time of battery replacement.
13	Configuration Setup	By default, configuration shall be done at factory for all volume corrector with process conditions, sensor and flow meter's characteristic and calibration for direct on site operations. GGL will provide the list of configuration parameters Configuration and log data should not be lost/

Approved

		reset at the time of date change or any reconfiguration. EVC shall have a provision to set Gas Hour and Gas day (Locally as well as remotely).
		Any version change information shall be communicated by VENDOR. In case of requirement of updation / degradation of version, vendor shall do it at site without any additional cost to GGL. Log should be created whenever configuration is changed/edited like what changes have been carried out and by which login ID.
14	Construction Standards	EN 12405 - Electromagnetic Compatibility.
		EN 61000-4-2 , 3 , 4 , 6 - Electromagnetic Compatibility.
		EN 50039 - Electrical system for intrinsic safety.
		EN 50020 - Electrical equipment for hazardous area.
		AGA-7 - Calculation of flow.
		AGA-8 Detailed- Calculation of Compressibility factor.
		EN 60529 - Degree of protection.
		EN 60079- Explosive Atmosphere Standards
		PNGRB T4S Regulation standard.
		IS 5571 & IS 5572.
15	Calculations Standards	Compressibility calculation shall be as per the following: AGA-8 (gross and detailed methods) AGANX19, S-GERG and Table of Z
16	Features	Archive Logs with Avg, Min, Max & actuals for below limits: 1. Min 15 Days Interval Log Data (Vendor to specify the duration of interval) 2. Min 30Days Hourly Log data 3. Min 120 Days Daily Log Data 4. Min 2 years of Monthly Data *5.* Audit trial facility for 200 event or parameter logs and 100 alarms. *(Vendor to specify if not meeting above criteria)* Each of these logs mentioned above shall store minimum following values: • Temperature (Min, Max and Avg.) • Pressure (Min, Max and Avg.) • Uncorrected flow rate (Min, Max and Avg.) • Corrected flow rate (Min, Max and Avg.) • Uncorrected volume • Corrected volume • Cumulative Uncorrected volume • Cumulative Corrected volume • Compressibility and Correction factor • Flow time (Time for which gas flow detected)
		Shall have built in diagnostics to detect proper functioning of EVC. EVC shall be able to display an alarm in case of any of the metrological sensor is failed. EVC shall have a provision to configure the backup values for Pressure and Temperature sensors which would come in force if any of these sensors fail.
		Shall have data security through password / Key-lock facility, 3-level password and volume conversion and configuration to be sealed. Log data to be deleted provision with restricted access.
		Parameters and programmed constants shall be stored in EEROM/non-volatile memory.
		The stored data shall be retrievable by using PC/Laptop/online remote communication.
		Suitable dedicated port shall be available on the volume corrector for portable PC connection other than port provided for Modem connectivity.
		Software required shall be supplied for remote access of the EVC and retrieval of all data at Site as specified. Software shall have phonebook

Approved

		facility. Software shall have feature to schedule the dialing of group of companies. With auto dialup facility & auto creating/saving database in PC or laptop after remote as well as local data fetching. Remote Reading software provided along with the EVC shall have provision to set automatic dialling of sites / group of sites at pre-defined date and time.
		Vendor shall furnish the dial out facility if any.
		EVC continues to perform its metrological function even while the communication is in progress.
		EVC shall be configurable to send the SMS to concern person whenever there is change in critical metrological parameters or occurrence of such alarm.
17	Keypad	Weather proof Membrane Type Keypad with security enabled keypad.
18	Hazardous Area	Certified intrinsically safe for area classification IEC ZONE 1GR IIA/IIB T3. ATEX certification and intrinsically safe. Certification class shall be marked on the volume corrector. Vendor shall provide the CE type certification.
19	Site Conditions	Ambient Temperature range -20 to 55 deg C, Hot, Humid, Tropical, Saline. EVC shall able to sustain medium level of shock/vibration.
20	Enclosure	Shall be Explosion proof w better with Class 1, Division 1., Group 'D', ATEX approval. IP 65 or better ingress protection shall be provided in the EVC.
21	EVC Mounting	Outdoor or external with fully stable mounting facility with any RPD meter (using strong pole and clamping facility to avoid any vibration of EVC resulting in malfunctioning of equipment). The mounting plate shall be non-corrosive in nature. (Preferably Aluminum with powder coating). VENDOR shall ensure to provide common design for the both vertical and horizontal installation provision. EVC stand design to be approved from GGL before supply.
22	Overall Accuracy of EVC	As per EN12405 standard (Supporting document to be submitted along with the bid).
23	Data Storage	Live Pressure - Min, Max, Avg & Actual
		Live Temperature - Min, Max, Avg & Actual
		Uncorrected volume last hour
		Corrected volume last hour
		Configuration parameters
		Malfunctioning alarm log with date and time stamp
		Peak Uncorrected and corrected Flow values & Time.
		Present day volume.
		Previous day volume.
		Corrected Counter
		Uncorrected Counter
		Corrected Counter(Under Alarm)
		Uncorrected Counter(Under Alarm)
		Log data to be stored in EVC. This shall be stored in FILO.(1st In First Out)
		Deletion shall have authorization. Change in the configuration except the counter & impulse data shall not erase the data. Change in Date & time also erases the data, vendor need to ensure that data is restorable if required.
24	Other	Two sets of software for retrieving the stored data at site and also through remote access, programming the volume corrector using portable PC(laptop), software based on All prevailing windows OS shall be supplied. Collected data shall be stored in OEM software database. Communication / optical cables (From EVC to laptop) shall be provided as per the requirement specified separately in Annexure - I. In future, if required more cables should be provided based on request.

Approved

		3 sets of volume corrector documentations including product literature, software/hardware manual, maintenance instruction, calibration certificates, approval certificates etc… shall be supplied.
25	Warranty	All parts shall be warranted for 18 months from the delivery date or 12 months from commissioning date whichever is earlier.
26	Packaging	Appropriate material and method shall be used for packing to protect the material from damage during transportation. All necessary markings like normal position, handle with care etc. shall be mentioned on package.
27	Spares and Services	Vendor shall furnish certificate that the offered product shall be supported with spares and services for at least 10 years post orders.
28	Testing	Each EVC shall be individually tested and test certificate submitted along with the EVC:

9. DATA SHEET FOR MODEM

Sr. No.	Description	Proposed Specification
1.	**General Specifications**	
1.1	Power Requirements	Vendor to furnish
1.2	Connectors & Fasteners	Serial connector : (Commensurate with EVC port supplied)
		Power connector : Vendor to furnish
		SIM receptacle : Vendor to specify SIM slot as Macro/Micro/Nano
1.3	Operating Temperature Range	-20 to 55 deg C
1.4	Material	Polycarbonate
1.5	Certifications	• ATEX approval, for hazardous installation (In case of Integrated modems). • ATEX approval for safe area installation and connection with EVC installed in Hazardous area (In case of separate modem)
		Intrinsically safe
		CE mark
		EMC : FCC part 2, 15, 22, 24, EN 55055 & EN 55024
		Safety : UL 60950, EN 60950
1.8	Make	Vendor to Furnish
1.9	Model	Vendor to Furnish
2.	**Electrical characteristics**	
2.1	Switching modem ON/OFF	The device is permanently powered (when connected to the external power supply).
2.2	Over & Under Voltage	Vendor shall specify the guaranteed working parameters.
2.3	LED Indicators	TD, RD, CD, LS, TR and PWR for different functions and any other additional functions shall be provided.
2.4	Standards	Dual band extended GSM 900MHz Class 4(2 W) and GSM 1800/1900MHz Class 1(1 W), GPRS support.
2.5	Interface	Commensurate with EVC interface supplied, auto bauding function, At command set based on V.25 ter and GSM 07.05 & 07.07.
2.6	Data	Asynchronous 2400, 4800, 9600, and 14400 bps.
3.	**MODEM Housing & other accessories**	
3.1	MODEM Housing	IP 65 and better

Approved

3.2	Power Supply	External power supply shall be the main source for operation of Modem. Modem shall be equipped with backup battery and modem's operation shall be configurable to work in time window mode in case power supply is not available.
4.	**Others**	
4.1	Security	MODEM shall be configurable for the signal from EVC/Mechanical counter for SMS /Event output. SMS alert shall be configurable up to 03 persons.
4.2	Spares & Services	Vendor shall furnish certificate that the offered product shall be supported with spares and services for at least 10 years post order.
4.3	Connectivity	MODEM should be able to communicate with any make of EVC.

10. DATA SHEET FOR FRP PANEL

Data Sheet of FRP Box & Mounting Pole		
Sr. No.	**Description**	**Proposed Specification**
1	Make	Vendor to Furnish
2	Model	Vendor to Furnish
3	Confirming Standard	IS 13410. VENDOR shall provide the Test certification for the same.
4	Typical Dimensions	600 L * 400 W * 350 D (in mm) with one compartment.
5	Operating Temp	Range 0 to 60 Deg C.
6	Process	5mc – Sheet Molding compression by Hot Compression.
7	Color	Off-White
8	Withstand Temperature	Min. 150 Deg C
9	Door Hinge material	SS 316/304 with sealing hole option.
10	Clamp	MS Galvanized plated wall mounted clamp.
11	Back Sheet	Mounting of accessories inside box- 5mc sheet.
12	Bolt and Nut with washer	SS 316, M10 pole clamp fixing Bolt & Nut with washer, MS Hot dip Bolt M6*25 mm for 5mc sheet & pole flat fixing.
13	Gland	Collapsible gland – 03 nos' (02 nos' -11 mm ID and 01 nos' – 07mm ID).
14	Inside Equipment	Modem
		Power Supply unit
		Voltage Stabilizer
15	Mounting	On 2" ERW Mounting pole
General Specifications for Mounting Pole:		
1	Material	ERW Steel Pipe
2	Top End	Close type welded cap
3	Coating	Powder coating
4	Typical Dimensions	1100 * 50 (In mm)
5	Base Plate	150 * 150 * 5(In mm), Provision on plate for anchor fastening.
Test certificate shall be provided for FRP sheet. Note: FRP box should fit Modem, Power Supply Unit and Voltage stabilizer.		

Approved

Annexure - 1

Typical Drawing for FRP Box with Mounting Pole:

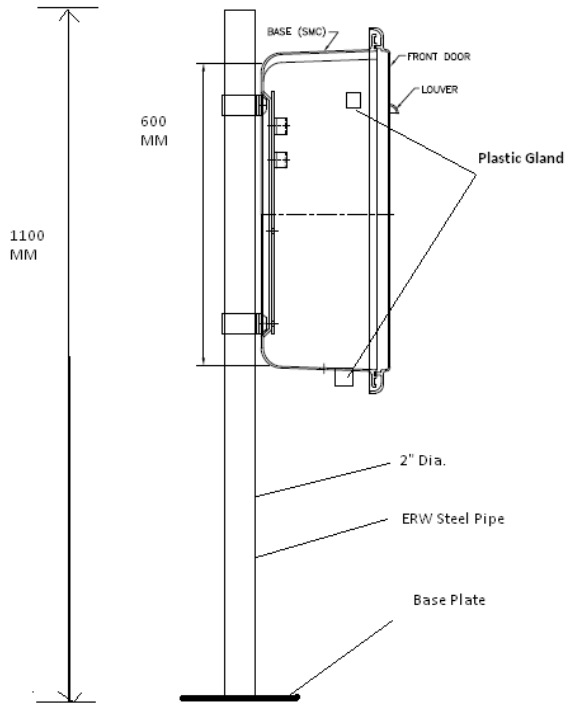

PROJECT - MOUNTING POLE
MATERIAL - ERW STEEL PIPE
COATING - POWDER COATING
DIMENSION - 1100*50 (MM)

Appro

Annexure – 2

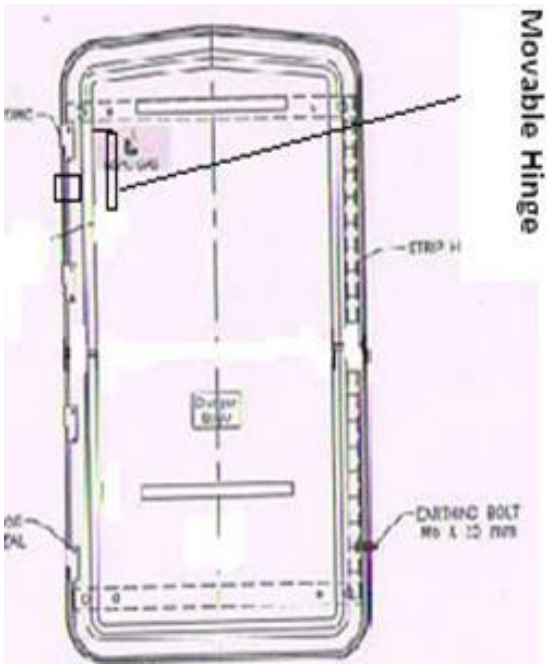	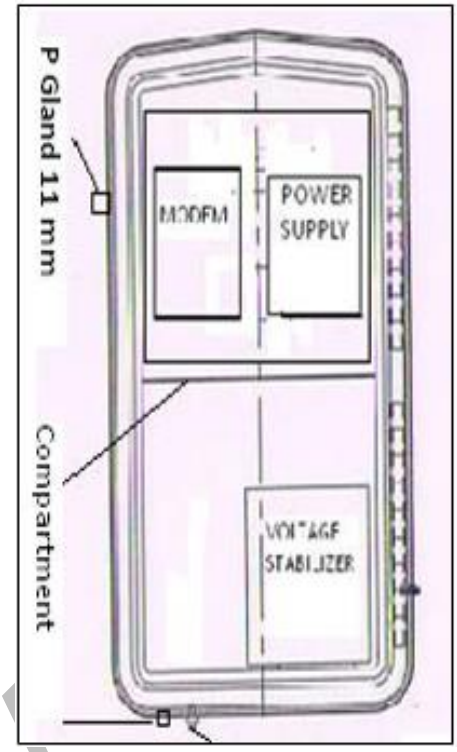
Front View	Door Open
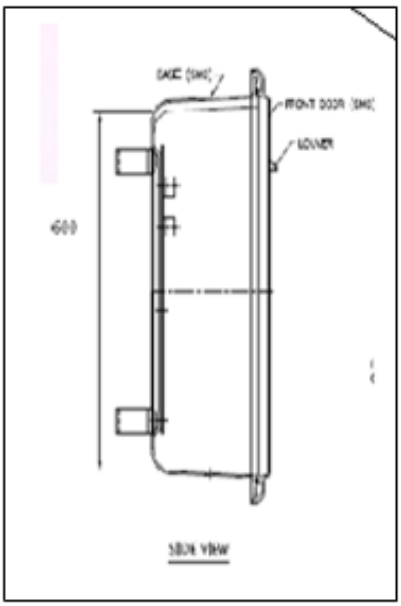	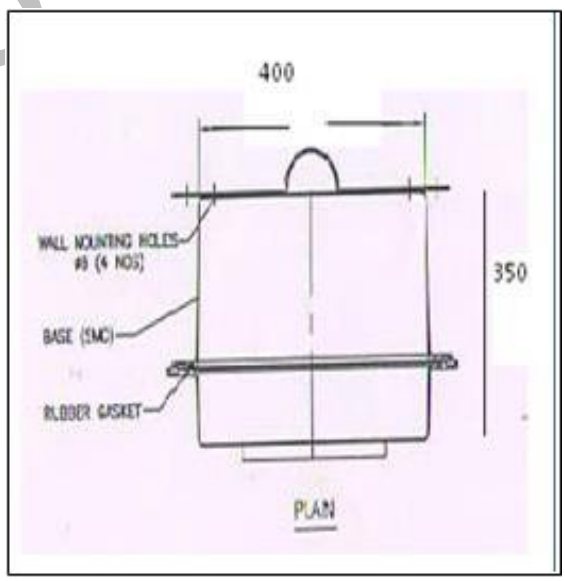
Side View	Plan

GUJARAT GAS

11. DATE SHEET FOR POWER SUPPLY AND VOLTAGE STABILIZER

Sr. No.	Description	Specification
General Specifications Power supply:		
1	Make	Vendor to furnish
2	Model	Vendor to furnish
3	Input Range	230 V AC +/- 10%
4	Output Range	Shall be suitable for trouble free operation of the supplied modem.
5	Current Rating	Vendor to ensure correct rating is supplied as required for the supplied modem.
6	Ambient Temperature	0 Deg C to 50 Deg C
7	Enclosure	IP65 and Above
8	Certification	Intrinsically safe IA, for safe area installation
9	Dimension	Vendor to furnish and should fit into box
10	Off load voltage	Vendor to furnish
11	On load voltage	Vendor to furnish
12	Current limiting	Vendor to furnish
13	Frequency	50 Hz (+/-3%)
14	Protection	Fuse protection for Over and Under voltage protection, Short circuit protection.
General Specifications for Digital Voltage Stabilizer:		
1	Make	Vendor to furnish
2	Capacity	0.5 KVA
3	Input Voltage range	180 V to 295 V AC
4	Output Voltage	230 V +/- 10%
5	Cooling	Air Cooled
6	Winding	Copper Wound
7	Duty Cycle	Continuous
8	Frequency	47-53 Hz
9	Ambient Temperature	0 to 50 Deg C
10	Protection	Over Voltage Under Voltage Spike Filtration up to 5 KV EMI/RFI protection Input Fuse for over voltage & Under voltage protection
Test certificate shall be provided for the same.		

Approved